P3N6S™, P4N6S™ AND P6N6S™ SOFT SEAT NEEDLE VALVE

SOFT SEAT NEEDLE VALVE

3/16”, 1/4” and 3/8” Bore Soft Seat Valve

Soft seat needle valves are designed for use with various instrumentation equipment and can be installed to control, isolate, measure, calibrate, equalize, drain or vent the pressure of gases and liquids. Phoenix’s roddable needle valves are of bar stock construction and are available in various materials, sizes, sealing styles, end connections and stem types. The main features of Phoenix needle valves are robust stems, tapered stem tips, bubble tight seals and pinned bonnets with packing below the threads to prevent process contamination.

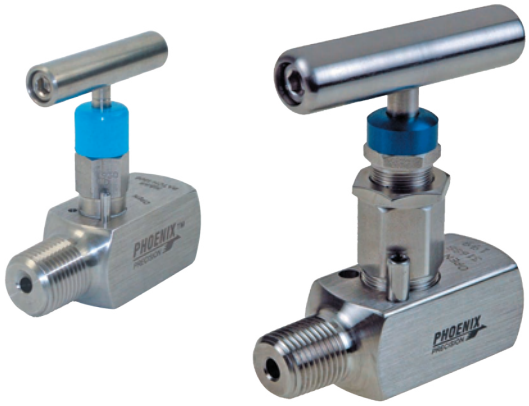

Standard Features	Benefits
Hydrotested at 150% of rated pressure (shell test). Nitrogen gas tested to 2000 psi.	Complies with ASME B31.1 & B31.3 shell testing procedures as standard. Ensures structural integrity of valve.
Seat tightness (zero leakage) verified to 110% of rated pressure. Nitrogen gas tested to 2000 psi.	Complies with ASME B31.1 & B31.3 seat testing procedures as standard. Ensures zero leakage at seats for proper calibration.
Packing below stem threads	Prevents corrosion of critical stem threads
Metal body-to-bonnet seals are in compression, not tension	Mitigates risk of stress cracking
Stem threads are rolled, not cut	Higher quality stem for longer service life
8 RMS stem finish	Extended packing life
V-Style Teflon™ packing	30-40% less operational torque and less frequent packing adjustments than traditional Teflon™ packed valves
Pressure component materials sourced from the US, Canada or Europe	Reliable material traceability. MTR’s provided with every order for pressure containing components.

P3N6S Assembly

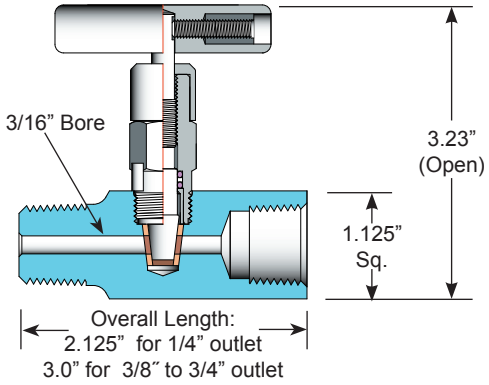

Specifications:
Type: **P3N6S** Valve, Roddable Pattern
Rating: Up to 6000 psi @ 100ºF (41370 kPa @ 38°C)
Stem: Tapered Plug Tip
Packing: Vition™, Aflas™ O-ring or Teflon™
Seat: Delrin™
Handle: Removable
Bore Size: 3/16"
Inlet Connections: 1/4" to 1/2" NPT, 3/4" for Male NPT Only)
Outlet Connections: 1/4" to 1/2"NPT
Bonnet Lock: Pin or Plate
Body Stock: 1.125" square
Weight: 0.9 - 1.0 lbs
Special Service: O_2 or CL cleaning available*

*Other specifications or services may be available.

P4N6S Assembly

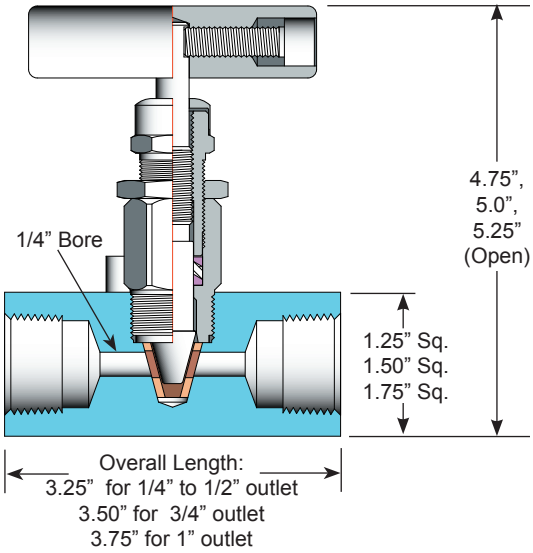

Specifications:
Type: **P4N6S** Valve, Roddable Pattern
Rating: Up to 6000 psi @ 100ºF (41370 kPa @ 38°C)
Stem: Tapered Plug Tip
Packing: Vition™, Aflas™ O-ring or Teflon™
Seat: Delrin™
Handle: Removable
Bore Size: 1/4"
Inlet Connections: 1/4" to 1/2", 3/4", 1" NPT
Outlet Connections: 1/4" to 1/2", 3/4", 1" NPT
Bonnet Lock: Pin or Plate
Body Stock: 1.25", 1.50" or 1.75" square
Weight: 1.5 - 1.6 lbs
Special Service: O_2 or CL cleaning available*

*Other specifications or services may be available.

P6N6S Assembly

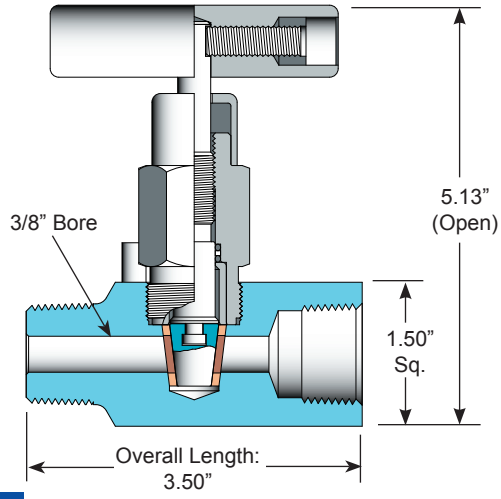

Specifications:
Type: **P6N6S** Valve, Roddable Pattern
Rating: Up to 6000 psi @ 100ºF (41370 kPa @ 38°C)
Stem: Non-rotating Tapered Plug Tip
Packing: Vition™, Aflas™ O-ring or Teflon™
Seat: Delrin™, Tefzel™ (2000 psi Rating)
Handle: Removable
Bore Size: 3/8"
Inlet Connections: 1/2" to 3/4"NPT, 1" for Male NPT Only)
Outlet Connections: 1/2" to 3/4"NPT
Bonnet Lock: Pin or Plate
Body Stock: 1.50" square
Weight: 1.9 - 2.1 lbs
Special Service: O_2 or CL cleaning available*

*Other specifications or services may be available.

P3N6S™, P4N6S™ and P6N6S™ Needle Valve
Bonnet, Stem and Seat Characteristics

3/16” Bonnet Assembly

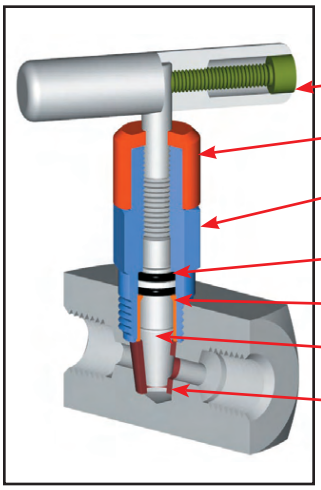

1/4” Bonnet Assembly

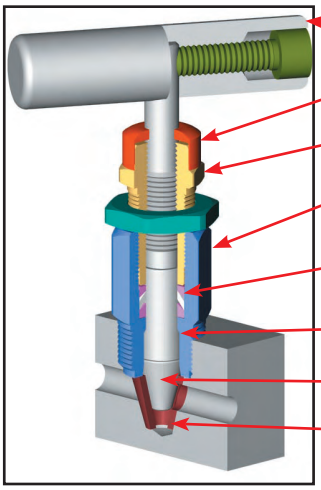

3/8” Bonnet Assembly

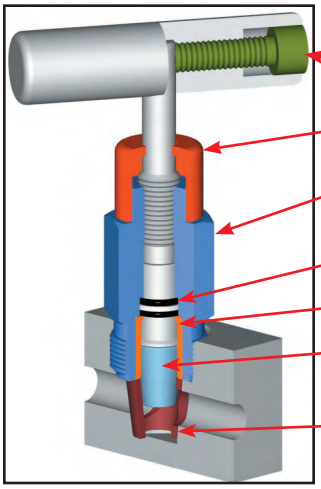

Materials of Construction

Code	SS	SC	CS
Body	ASTM A182 316SS	ASTM A105 CS	ASTM A108 CS
Bonnet	ASTM A182 316SS	ASTM A182 316SS	ASTM A108 CS
Stem	ASTM A182 316SS	ASTM A182 316SS	ASTM A582 303SS
Adjuster	ASTM A582 303SS	ASTM A582 303SS	ASTM A108 CS
Insert	ASTM A182 316SS	ASTM A182 316SS	ASTM A108 CS
Handle	ASTM A582 303SS	ASTM A582 303SS	ASTM A108 CS

Stem and Seat Configurations

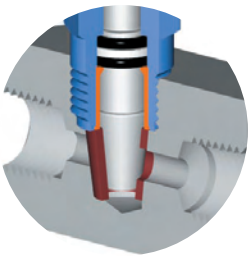

3/16” Bore

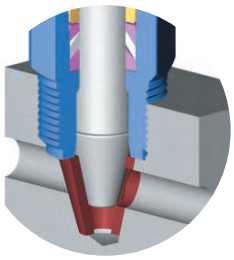

1/4” Bore

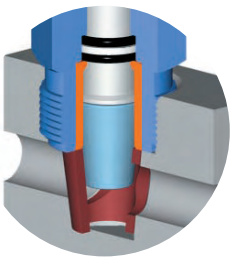

3/8” Bore

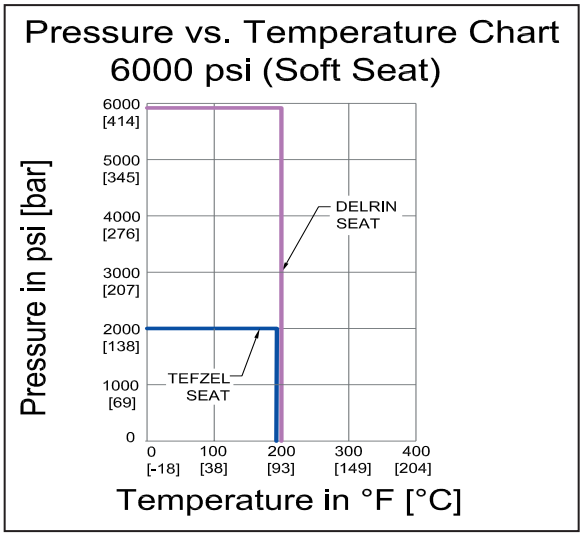

Note: Packing material ratings based on manufacturer’s specifications. Approximations only. Phoenix does not represent these values as finite. They are provided only as representative values.

P3N6S™, P4N6S™ and P6N6S™ Needle Valve
Model Numbering System

Phoenix	Orifice Size	Type	Inlet Size	Inlet Type	Outlet Size	Outlet Type	Material	Packing	Seat	Stem Tip
P	3=3/16”	N6S	4=1/4” (P3, P4 Only)	F=FNPT	4=1/4” (P3, P4 Only)	F=FNPT	SS=ASTM A182 316/316L	A=Aflas™	D= Delrin™	Tapered Plug Tip Standard (leave blank)
	4=1/4”	NA6H= Angle Body	6=3/8” (P3, P4) Only	M=MNPT	6=3/8” (P3, P4 Only)	M=MNPT	SC=ASTM A105 CS*	V=Viton™ (FKM)	Z= Tefzel™ (P6 Only)	
	6=3/8”		8=1/2”		8=1/2”		CS=ASTM A108 CS*	T=Teflon™ (PTFE)		
			12=3/4” (Male only)		12= 3/4”		C5=ASTM A350 LF2			
			16=1” (Male only)				N4=Monel™ 400			
							N6=Inconel™ 625			
							N8=Inconel™ 825			
							N2=Hastelloy™ C276			
EXAMPLE: P3N6S4M4FCSV = Phoenix, 3/16” Orifice, N6S, 1/4” MNPT Inlet, 1/4” FNPT Outlet, A108 CS Body, FKM Packing, Delrin™ Seat, Tapered Plug Tip Stem										
P	**3**	**N6S**	**4**	**M**	**4**	**F**	**CS**	**V**	**D**	
*For code applications, A108 CS is unacceptable, A105 CS must be selected for CS valves.										

Option Codes	Description
LB	Bonnet Lock
CC	Chlorine Clean
OC	Oxygen Clean
TG	SS Tag
SGI	Sour Gas ISO NACE Latest Rev.
RA (R)(B)	Round Handle Aluminum (Red) (Blue) (P3 Only)
RC	Round Handle C.S. (P3 Only)
RS	Round Handle S.S. (P3 Only)
PM	Panel Mount
N4	Monel™ 400 Stem
N5	Monel™ 500 Stem
N6	Inconel™ 625 Stem
N8	Inconel™ 825 Stem
N2	Hastelloy™ C276 Stem

Use with Confidence, Phoenix Precision Products Meet the Following Specifications:

- ASME B31.1 Power Piping
- ASME B31.3 Process Piping
- ASME B16.34 Valves - Flanged, Thread, and Welding End
- API 598 Valve Inspection and Testing
- MSS SP-25 Standard Marking Systems for Valves, Fittings and Flange Unions
- MSS SP-99 Instrument Valves
- MSS SP-105 Instrument Valves for Code Applications
- NACE MR0175 for all 316SS valves and A105CS body/ 316SS bonnet (SC Material Code)

Seal and Seat Material Temperature Rating

Code	Description	MIN. TEMP	MAX. TEMP
A	Aflas™	15°F (-10°C)	400°F (204°C)
V	Viton™	-20°F (-29°C)	400°F (204°C)
T	Teflon™	-65°F (-54°C)	450°F (232°C)
D	Delrin™	-40°F (-40°C)	200°F (93°C)
Z	Tefzel™	-300°F (-185°C)	300°F (150°C)

For further information please contact:

Phoenix Precision Ltd.
2620 21st Street N.E.
Calgary, Alberta T2E 7L3
Phone:(403) 291-3154
Fax: (403) 291-3292
email: phoenix@phoenixprecision.ca
www.phoenixprecisionvalves.com

ISO 9001:2008 Certified System

Distributor / Representative:

Phoenix Precision Ltd. (PPL) provides the information herein in good faith but makes no representation as to its comprehensiveness or accuracy. The information contained herein is intended only as a guide to PPL products and services. Individuals using information must exercise independent judgment in evaluating product selection and determining product appropriateness for their particular purpose and system requirements. PPL MAKES NO REPRESENTATIONS OR WARRANTIES, EITHER EXPRESS OR IMPLIED, INCLUDING WITHOUT LIMITATION ANY WARRANTIES OF MERCHANTABILITY OR FITNESS FOR A PARTICULAR PURPOSE WITH RESPECT TO THE INFORMATION SET FORTH HEREIN OR THE PRODUCT(S) TO WHICH THE INFORMATION REFERS. ACCORDINGLY, PPL WILL NOT BE RESPONSIBLE FOR DAMAGES (OF ANY KIND OR NATURE, INCLUDING INCIDENTAL, INDIRECT, OR CONSEQUENTIAL DAMAGES) RESULTING FROM THE USE OF OR RELIANCE UPON THIS INFORMATION. Patents and Patents Pending in the U.S. and foreign countries. PPL reserves the right to change product designs and specifications without notice.

DELRIN, TEFZEL, VITON and TEFLON are registered trademarks (hereinafter referred to as TM) of E.I. Du Pont De Nemours and Company Corporation. PEEK is a registered TM of Whitford Wordwide Company and Whitford B.V. KEL-F is a registered TM of M.W. Kellogg Company. GRAFOIL is a registered TM of High Temperature Materials Inc. and Graftech INC. Corporation. AFLAS is a registered TM of Asahi Glass Co. Ltd. Corporation Japan. MONEL and INCONEL are registered TMs of Huntington Alloys Corporation. HASTELLOY is a registered TM of Haynes International, Inc.

© 2010 by Phoenix Precision Ltd. All rights reserved. Material in this brochure or catalogue may not be reproduced in whole or in part, in any form, without written permission from the publisher.