P6MEV3S™ 2-EQUALIZER, 1-VENT MANIFOLD

EV STYLE MANIFOLD

2-Equalizer and 1-Vent Manifold

The EV Style Manifold is designed for users who install primary block valves for isolation and calibration functions at the orifice taps. The manifold features two equalizer valves and one vent valve. It also features two 1/4" FNPT calibration ports, a 1/4" vent port and a 3/8" bore for optimal measurement accuracy. To maximize the utility of the EV Style Manifold, customer should utilize the valve in conjunction with a 3/8" full port primary block valve.

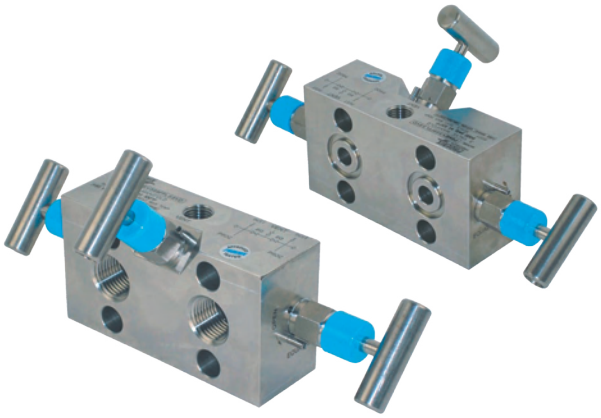

Standard Features	Benefits
Hydrotested at 150% of rated pressure (shell test). Nitrogen gas tested to 2000 psi.	Complies with ASME B31.1 & B31.3 shell testing procedures as standard. Ensures structural integrity of valve.
Seat tightness (zero leakage) verified to 110% of rated pressure. Nitrogen gas tested to 2000 psi.	Complies with ASME B31.1 & B31.3 seat testing procedures as standard. Ensures zero leakage across seats for proper calibration.
Packing below stem threads	Prevents corrosion of critical stem threads
Metal body-to-bonnet seals are in compression, not tension	Mitigates risk of stress cracking
Stem threads are rolled, not cut	Higher quality stem for longer service life
8 RMS stem finish	Extended packing life
V-Style Teflon™ packing	30-40% less operational torque and less frequent packing adjustments than traditional Teflon™ packed valves
Pressure component materials sourced from the US, Canada or Europe	Reliable material traceability. MTR's provided with every order for pressure containing components.

P6MEV3S™ Manifold
Technical Specifications

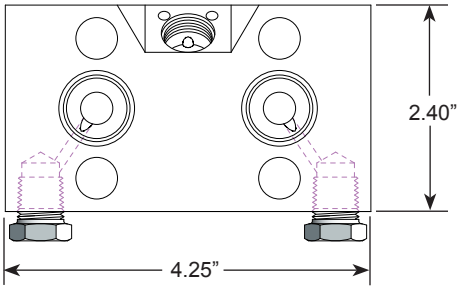

Inlet side

Specifications:

Type: **P6MEV3S**, EV Manifold, Globe Pattern
Rating: Up to 6000 psi @ 100ºF
(41370 kPa @ 38°C)
Stem: Flat tip
Packing: Aflas™ or Viton™ O-ring, Teflon™
Seat: Delrin™
Handle: Removable
Bore Size: 3/8” process, 1/8” bleed and eq.
Inlet Connections: FNPT
Outlet Connections: 4-bolt flange
Bonnet Lock: Pin or Plate
Body Stock: 4.25” x 2.40” x 1.5”
Weight: 4.2 - 4.5 lbs
Special Service: O_2 or CL cleaning available*

*Other specifications or services may be available.

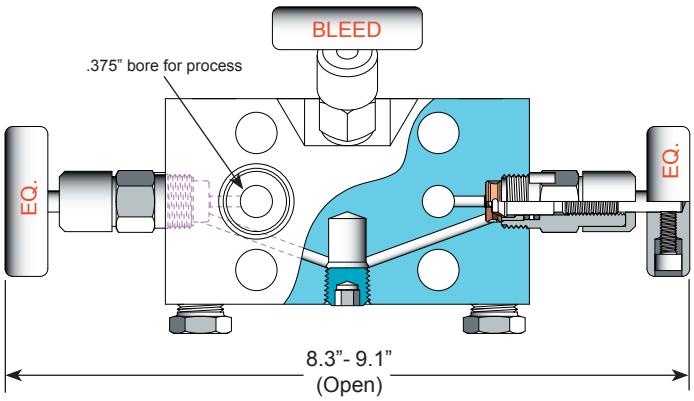

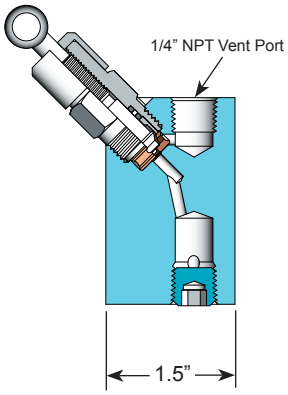

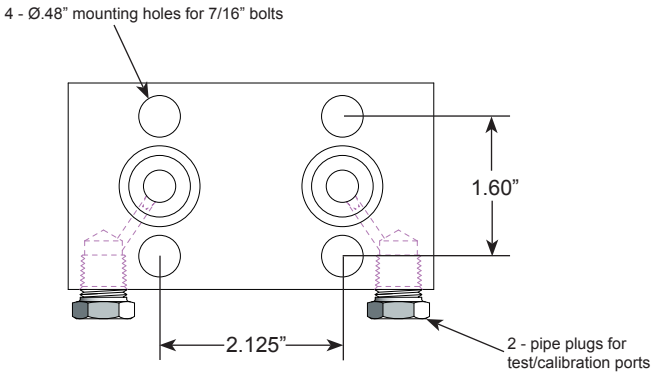

Outlet side

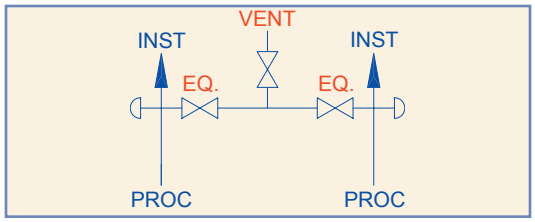

P6MEV3S™ Manifold
Bonnet, Stem and Seat Characteristics

O-Ring Bonnet Assembly

Standard Materials					
Valve	Body	Bonnet	Stem	Seat	Packing
CS	ASTM A108CS	ASTM A108CS	ASTM A582 303SS	Delrin™ or Peek™	Dual Viton™ O-ring with Teflon™ backup ring
SC	ASTM A105CS	ASTM A182 316SS	ASTM A182 316SS		
316SS	ASTM A182 316SS	ASTM A182 316SS	ASTM A182 316SS		

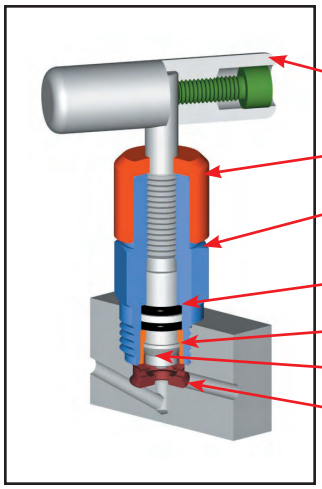

Packed Bonnet Assembly

Standard Materials					
Valve	Body	Bonnet	Stem	Seat	Packing
CS	ASTM A108CS	ASTM A108CS	ASTM A582 303SS	Delrin™ or Peek™	Teflon™ and Grafoil™
SC	ASTM A105CS	ASTM A182 316SS	ASTM A182 316SS		
316SS	ASTM A182 316SS	ASTM A182 316SS	ASTM A182 316SS		

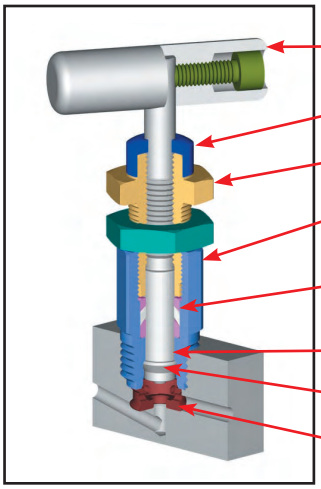

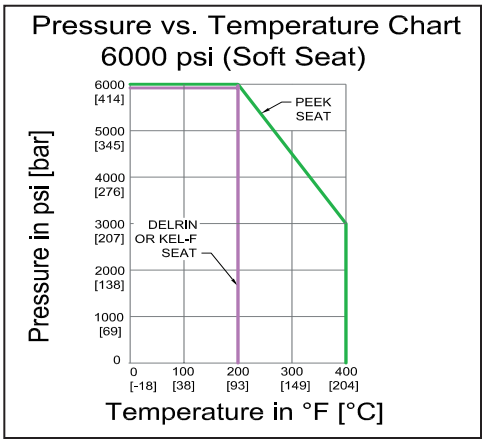

Note: Body material specifications based on ASME B16.34 - 2009. Packing material ratings based on manufacturer's specifications. Approximations only. Phoenix does not represent these values as finite. They are provided only as representative values.

Stem and Seat Configurations

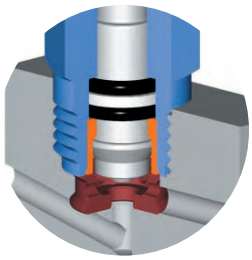

O-ring Seal with Flat Tip

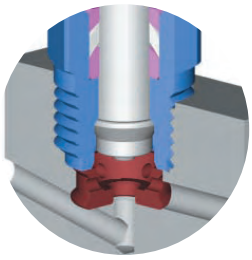

Packed with Flat Tip

P6MEV3S™ Manifold
Model Numbering System

Phoenix	Orifice Size	Type	Inlet Size	Inlet Type	Outlet Size	Outlet Type	Material	Packing	Seat	Stem Tip
P	6=3/8"	MEV3S	8=1/2"	F=FNPT		FL=Flange	SS=ASTM A182 316/316L	A=Aflas™	D=Delrin™	Flat Tip Standard (leave blank)
							SC=ASTM A105 CS*	V=Viton™ (FKM)		
							CS=ASTM A108 CS*	T=Teflon™ (PTFE)		
							C5=ASTM A350 LF2			
							N4=Monel™ 400			
							N6=Inconel™ 625			
							N8=Inconel™ 825			
							N2=Hastelloy™ C276			
EXAMPLE: P3MEV3S8FFLSSVD = 3/8" Orifice, 3-Valve Manifold with 2 Equalize and 1 Bleed, 1/2" FNPT Inlet, 4-bolt Flange Outlet, 316 SS Body, Viton™ O-ring Seal, Delrin™ Seat										
P	**6**	**MEV3S**	**8**	**F**		**FL**	**SS**	**V**	**D**	

*For code applications, A105 CS must be selected for CS valves. Code grade bolts must be specified for code applications.
Note: **Standard Bolting**, 2.00" length, **CS** - carbon steel, Gr.8, zinc plated bolts; **SS** - stainless steel, 18.8 (304SS) bolts.
See **Option Codes** for non-standard bolts.

Option Codes	Description
LB	Bonnet Lock
CC	Chlorine Clean
OC	Oxygen Clean
TG	SS Tag
SGI	Sour Gas ISO NACE Latest Rev.
N4	Monel™ 400 Stem
N5	Monel™ 500 Stem
N6	Inconel™625 Stem
N8	Inconel™825 Stem
N2	Hastelloy™ C276 Stem
S6	316 SS Bolts
325CS	3.25" CS Bolts
325S4	3.25" 304 SS Bolts
325S6	3.25" 316 SS Bolts
B7	AISI 4140/4142 QT
B8C1	Class 1, 304SS, ST
B8MC1	Class 1, 316SS, ST
B8C2	Class 2, 304SS, ST, SH
B8MC2	Class 2, 316SS, ST, SH

Code Bolting Information

1. B7, B8C1, B8MC1, B8C2, B8MC2 are code grades to ASTM A193;
2. To specify code grade bolting, example: 225B7 indicates 2.25" bolt length; B7 grade, alloy steel, AISI 4140/4142
3. **QT**-Quenched & Tempered; **ST**-Carbide Solution Treated; **SH**-Strain Hardened

Use with Confidence, Phoenix Precision Products Meet the Following Specifications:

- ASME B31.1 Power Piping
- ASME B31.3 Process Piping
- ASME B16.34 Valves - Flanged, Thread, and Welding End
- API 598 Valve Inspection and Testing
- MSS SP-25 Standard Marking Systems for Valves, Fittings and Flange Unions
- MSS SP-99 Instrument Valves
- MSS SP-105 Instrument Valves for Code Applications
- NACE MR0175 for all 316SS valves and A105CS body/ 316SS bonnet (SC Material Code)

Seal and Seat Material Temperature Rating

Code	Description	MIN. TEMP	MAX. TEMP
A	Aflas™	15°F (-10°C)	400°F (204°C)
V	Viton™	-20°F (-29°C)	400°F (204°C)
T	Teflon™	-65°F (-54°C)	450°F (232°C)
D	Delrin™	-40°F (-40°C)	200°F (93°C)

For further information please contact:

Phoenix Precision Ltd.
2620 21st Street N.E.
Calgary, Alberta T2E 7L3
Phone:(403) 291-3154
Fax: (403) 291-3292
email: phoenix@phoenixprecision.ca
www.phoenixprecisionvalves.com

ISO 9001:2008 Certified System

Distributor / Representative:

Phoenix Precision Ltd. (PPL) provides the information herein in good faith but makes no representation as to its comprehensiveness or accuracy. The information contained herein is intended only as a guide to PPL products and services. Individuals using information must exercise independent judgment in evaluating product selection and determining product appropriateness for their particular purpose and system requirements. PPL MAKES NO REPRESENTATIONS OR WARRANTIES, EITHER EXPRESS OR IMPLIED, INCLUDING WITHOUT LIMITATION ANY WARRANTIES OF MERCHANTABILITY OR FITNESS FOR A PARTICULAR PURPOSE WITH RESPECT TO THE INFORMATION SET FORTH HEREIN OR THE PRODUCT(S) TO WHICH THE INFORMATION REFERS. ACCORDINGLY, PPL WILL NOT BE RESPONSIBLE FOR DAMAGES (OF ANY KIND OR NATURE, INCLUDING INCIDENTAL, INDIRECT, OR CONSEQUENTIAL DAMAGES) RESULTING FROM THE USE OF OR RELIANCE UPON THIS INFORMATION. Patents and Patents Pending in the U.S. and foreign countries. PPL reserves the right to change product designs and specifications without notice.

DELRIN, TEFZEL, VITON and TEFLON are registered trademarks (hereinafter referred to as TM) of E.I. Du Pont De Nemours and Company Corporation. PEEK is a registered TM of Whitford Wordwide Company and Whitford B.V. KEL-F is a registered TM of M.W. Kellogg Company. GRAFOIL is a registered TM of High Temperature Materials Inc. and Graftech INC. Corporation. AFLAS is a registered TM of Asahi Glass Co. Ltd. Corporation Japan. MONEL and INCONEL are registered TMs of Huntington Alloys Corporation. HASTELLOY is a registered TM of Haynes International, Inc.

© 2010 by Phoenix Precision Ltd. All rights reserved. Material in this brochure or catalogue may not be reproduced in whole or in part, in any form, without written permission from the publisher.